Rapid Rout-6410NC (With C Axis)

MODEL	Rapid Rout - 6410NC
Effective working size	3250 x 1250 x 200 mm
Vacuum Capacity	129 m^3/h
Drive system	INVT
X/Y/Z Max.Moving speed	X: 80m/min; Y: 40m/min; Z: 30m/min
Drill Head	PD 12V8H1S
Operating system	TPA system
Spindle	HSK-F63
Spindle power (standard)	12kW
Type of ATC	Servo magazine
Numbers of Tools changers	16
Working station	Double working stations
Working pressure	0.65MPa
Domestic Packing size (LxWxH)	5800 x 2310 x 2350 mm
Export packing size (LxWxH)	5800 x 2310x 2350 mm
Total power	24.4kW
Weight	5000kg
Voltage	415V/50Hz/3P

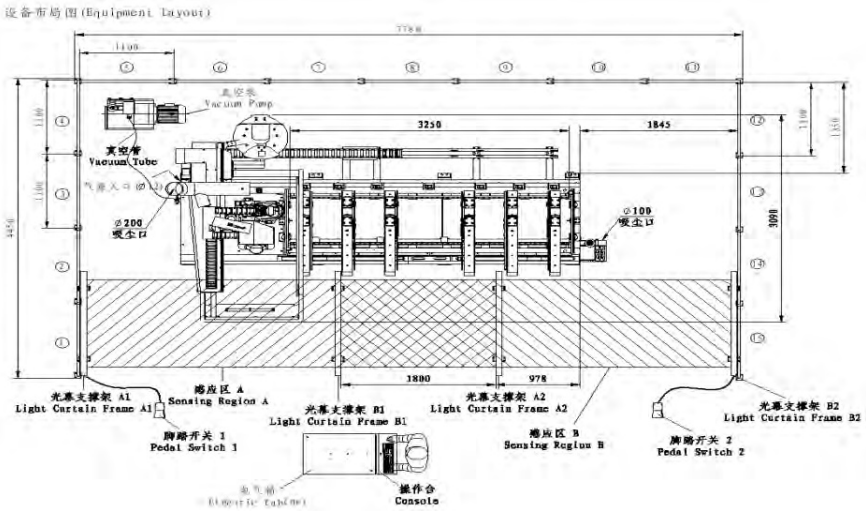

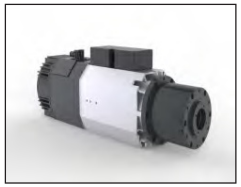

Spindle
12Kw high power. max.rotary speed 24000RPM/min, satisfying demands on high speed routering

Drill Head
PSK 12V 8H 15 continuous drilling according to demands; efficient work achieved

C axis
Standard with a C-axis, can be used with various angle heads to achieve special processes such as bevel cutting and 45° inclined lamino and so on

Precision Tool Touch Off
The tool setting is more accurate and the efficiency is improved

Tool Magazine
16-position rotary auto tool change which can change tools accurately and quickly, it can fulfill the needs of multi-process tool changes

Pod&rail table bridge
6 sets of Pod&rail table bridge, free and flexible combination of fast loading and unloading parts

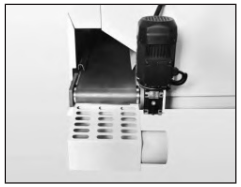

Automatic conveying and dust removal system
Improve dust removal effect and facilitate maintenance

Automatic lubrication system
Automatic lubrication of the transmission mechanism to ensure the long-term stable operation of the equipment

Clamps
Clamp workpiece in horizontal spare parts options in model 6410c/6516c/5516.

Clamp
Vertically clamp workpiece

Lamello grooving \r\n50061200033
Side lamello grooving, spare part options in model 6410/6410K/6410C/6516C/5516

Saw Blade 40Z ZY 60030010125
Saw blade for cutting spare parts option in 6410C, 6516C, 5516

Diamond blade\r\n60030010128
Spare parts options in model 6410C,6516C,5516

Aggregate 60170200190
can be mounted 4 types of different tools, applicable to side routing. grooving and drilling. spare parts options in model 6410c/6516c/5516

Aggregate\r\n60170200191
can be mounted with saw blade or routing tools for side grooving, spare parts option in 6410C, 6516C,5516

O Aggregate 60170200180
can be mounted tools 130mm to achieve deep grooving and drilling, such as keyhole process. spare parts option in 6410K, 6410C,6516C